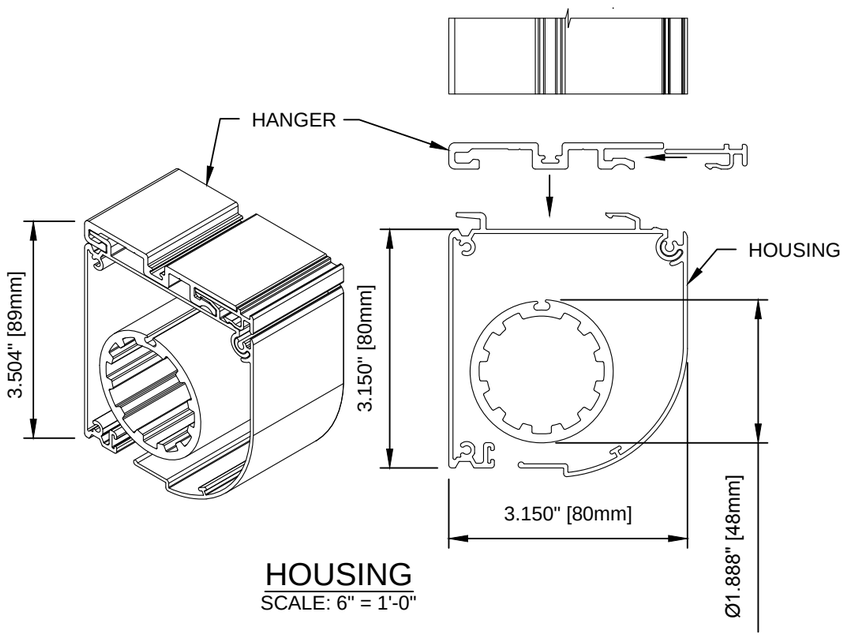

HOUSING
SCALE: 6" = 1'-0"

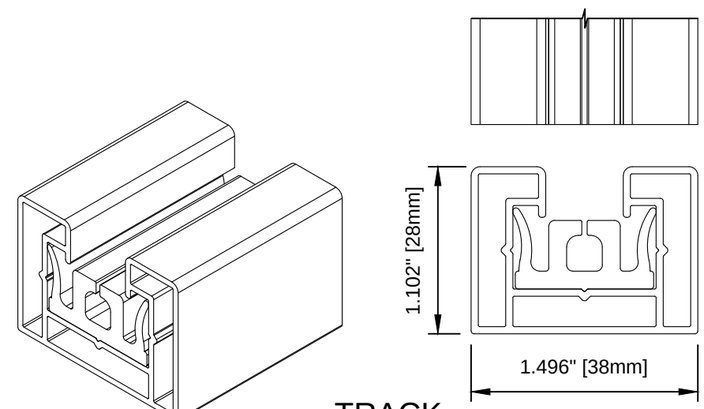

TRACK
SCALE: 1'-0" = 1'-0"

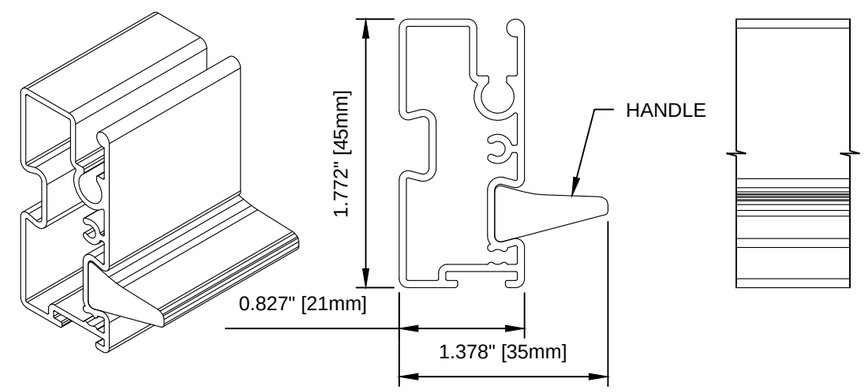

DRAWBAR
SCALE: 1'-0" = 1'-0"

Wizard Industries Inc.	WIZARD INDUSTRIES INC. 4263 PHILLIPS AVENUE BURNABY, BC V5A 2X4	SMART SCREEN DETAILS (80mm HOUSING)	SCALE: AS SHOWN DATE: MAY 08 2018 DWG: SB-002